Chimney kits for saunas

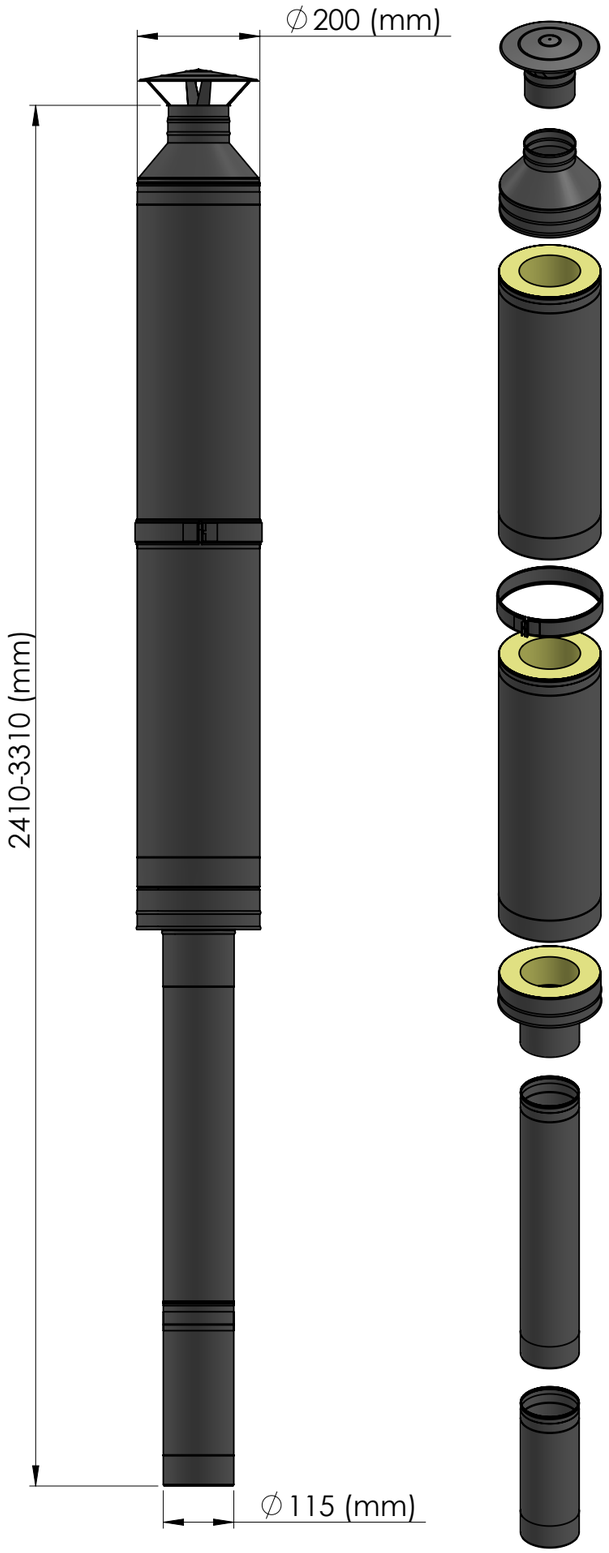

- Chimney-stack cover
- Top mount tip
- Rectilinear element of the double-walled chimney (length 700-1000 mm)
- Clamp
- Rectilinear element of the double-walled chimney (length 700-1000 mm)
- Lower tip
- Rectilinear element for the rigid insert (length 700-1000 mm)
- Rectilinear element for the rigid insert (length 300 mm)

Rubber roof seal

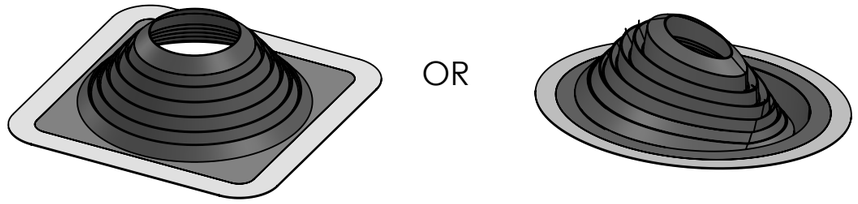

Insulation layer

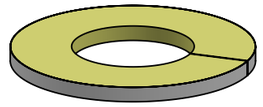

Tightening clamp for the rubber element

Finishing plate

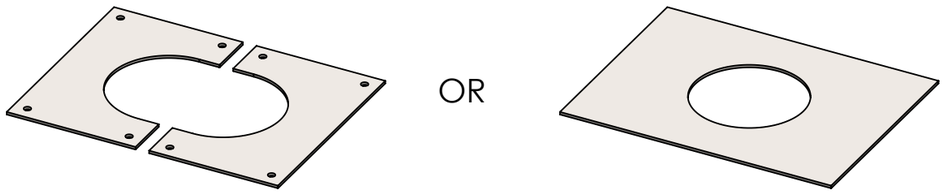

Silicone tube with bolts